Type P (pressure balance) complete valve PEX

PXTQ51-SPEX

Specifications

Composition

- R51-SPEX - Type P (pressure balance) rough without cartridge PEX

Available colors

- C : Chrome

Available flow

- 22 L/min, 5.8 gpm (US) 60psi

Certifications

- CSA B125.1
- ASME A112.18.1
- ASSE 1016
- CMR248 Approval
- ADA

Warranty

This **Riobel Inc.** product you have purchased carries a Limited Lifetime Warranty on the chrome, PVD finish, blacks and all working parts and is guaranteed from the initial purchase date against all manufacturing defects. All other finishes, including plastic components, are guaranteed for one year. All electric and/or electronic parts are covered by a 5-year limited warranty.

Customer Service

Ontario, West Canada : 888-287-5354 Quebec, Maritimes, United States : 866-473-8442

2021.06.15

Type P (pressure balance) rough without cartridge PEX

R51-SPEX

Specifications

Descriptions

- ½" inlet PEX
- Service valves
- ½" shower outlet PEX
- ¾" bath outlet PEX or ½" sweat
- Test cap
- TXX51XX trim required to complete
- Rough only

Available colors

- :

Certifications

- CSA B125.1
- ASME A112.18.1
- ASSE 1016
- CMR248 Approval

cUPC®

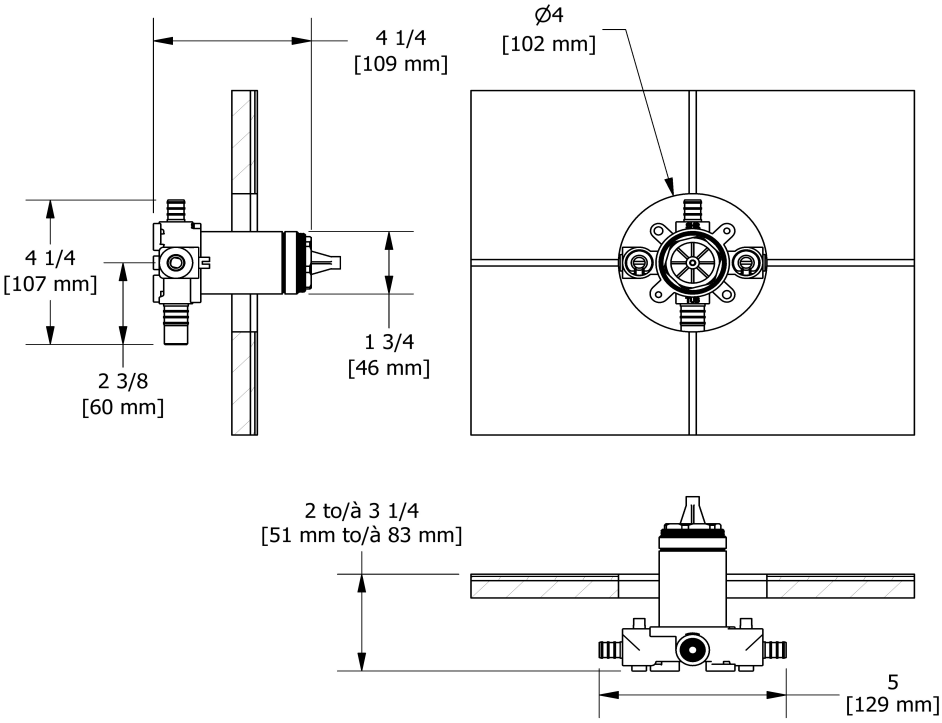

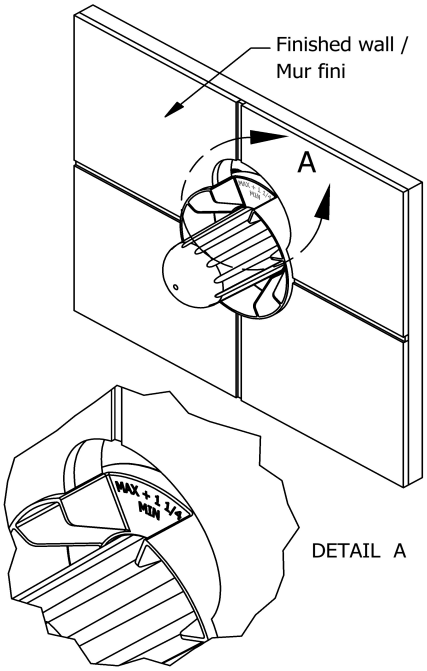

Wall template cut out, finished wall /
Gabarit de mur pour découpage, mur fini

Sizes, models and finishes may differ from thoses presented.

Warranty

This **Riobel Inc.** product you have purchased carries a Limited Lifetime Warranty on the chrome, PVD finish, blacks and all working parts and is guaranteed from the initial purchase date against all manufacturing defects. All other finishes, including plastic components, are guaranteed for one year. All electric and/or electronic parts are covered by a 5-year limited warranty.

Customer Service

Ontario, West Canada : 888-287-5354 Quebec, Maritimes, United States : 866-473-8442

2021.06.15