3-piece Type P (pressure balance) deck-mount tub filler with hand shower trim

TED16

Specifications

Descriptions

- 1-jet hand shower/scale-free
- Trim only
- Available summer 2016
- Cross handles unavailable

Available colors

- C : Chrome
- BN : Brushed Nickel (PVD)
- PN : Polished Nickel (PVD)

Certifications

- CSA B125.1
- ASME A112.18.1
- ASSE 1016
- CMR248 Approval
- ADA

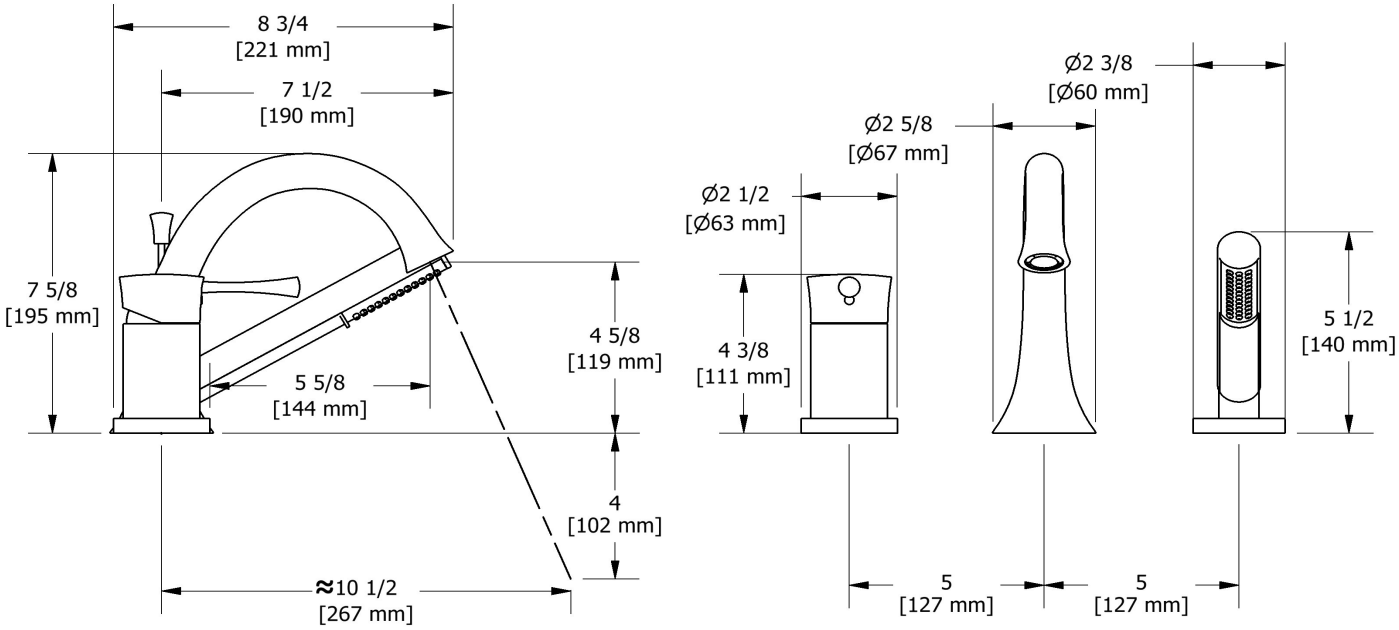

Sizes, models and finishes may differ from thoses presented.

Warranty

This **Riobel Inc.** product you have purchased carries a Limited Lifetime Warranty on the chrome, PVD finish, blacks and all working parts and is guaranteed from the initial purchase date against all manufacturing defects. All other finishes, including plastic components, are guaranteed for one year. All electric and/or electronic parts are covered by a 5-year limited warranty.

Customer Service

Ontario, West Canada : 888-287-5354 Quebec, Maritimes, United States : 866-473-8442

2021.05.06